LINITHERM®
insulation systems

LINZMEIER
building elements

Installation

Over-rafter insulation

General information and examples for the installation of LINITHERM above-rafter insulation systems

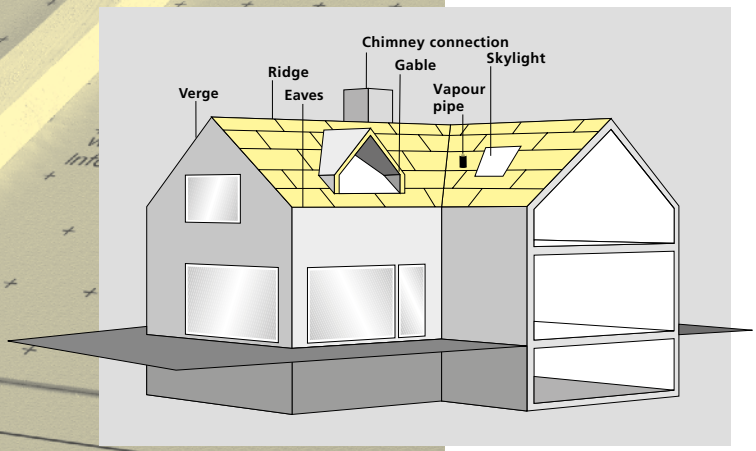

V 2

Preliminary remark

Delivery

LINITHERM insulating elements are delivered on pallets. Great care must be taken when unloading and transporting the elements on the building site. During all work (installation of the elements, attachment of the roof slats, etc.) attention must be paid that no damage is done to the elements.

Safety provision

The safety provisions for work on the rook must be adhered to as usual.

Rules of construction technology

LINITHERM insulation systems are high-quality products for the most various insulation solutions.
The elements are manufactured on modern production facilities in top-quality, flawless condition. In order to achieve the benefit of an optimal insulation solution, proper installation of the elements is essential.
Our installation recommendations serve as schematic information for the buyer/user.
They are non-binding and no not claim to be fundamentally valid, nor do they substantiate an entitlement to a guarantee. Each building offers different prerequisites; therefore the general procedure is to follow the rules of construction technology for each specific building.

Accessories

We offer suitable accessories for proper installation:
e.g. LINIFIX special screws, LINITHERM adhesive tapes, Compriband, LINITHERM L+D film, LINITHERM spray foam, LINITHERM nail sealing tape etc.

Tools

Only a few tools, which are usually available on any building site, are required for the installation of LINITHERM insulation systems. Suitable tools are, e.g.: Circular saw, hand saw, hammer, screwdriver.

Principles

The following points must generally be observed during and/or before the installation of the LINITHERM elements.

- The elements must be fully pushed together in longitudinal and transverse direction, in order to achieve a full-surface and consistent thermal insulation layer.
- In the case of elements with additional functions e.g. under-roof, attention must be paid to flawless windproofing in particular at all panel joints and construction-related connections.
  For the establishment of air tightness, the additional installation of LINITHERM L+D film is recommended.
- Any damage must be properly repaired (e.g. by masking, foaming, etc).
- The elements are usually installed longitudinally, parallel to the eaves, row by row from bottom (eaves) to top (ridge). Accurately aligned installation right from the first row facilitates the installation of the following rows.
- The counter-slats (cross-section acc. to static analysis) must be attached in compliance with static requirements (see also e.g. S 1, S 2 Statics).
  For the reduction of the perforations of the attachment screws / nails, LINITHERM nail sealing tape may be installed below the counter-lathing.
- All preparatory work (e.g. brickwork finished up to top edge of rafters, chimney completed etc.) should be finished by the beginning of the installation of the LINITHERM insulation elements.
- Covering of the roof should take place immediately after installation of the elements.
- In the case of outer wall insulation (e.g. WDVS), water penetration behind the wall insulation must be avoided by means of proper bonding or waterproofing to the brickwork.

Installation options

Several important detailed points are stated on the following pages. Our suggestions only represent a limited selection. The planning requirements and the specialised regulations, however, must always be adhered to.

LINITHERM insulation systems can be installed in several ways:

- Installation of the LINITHERM insulation systems on plywood boarding, if necessary with sarking membrane.
  The type of installation is suitable if rafters and boarding are to remain visible in the room. A sarking membrane e.g. LINITHERM L+D film, can be installed on the plywood boarding to protect it from weather influences.

- Installation of the LINITHERM insulation systems directly on the rafters.
  Due to the high compressive strength and rigidity of the LINITHERM insulation systems, the insulating panels can also be installed directly on the rafters. Many of the LINITHERM insulating systems already have several characteristics (e.g. under-roof, vapour barrier, optimal thermal insulation etc). Please also observe the information sheets for the individual types.

Some details are separately listed for the different types of installation.

Linzmeier Bauelemente GmbH Industriestraße 21 · 88499 Riedlingen, Germany· T +49 (0) 7371 1806-0 · F +49 (0) 7371 1806-96
Schortentalstr. 24 · 07613 Heideland b. Eisenberg/Th. Germany ·
T +49 (0) 36691 722-0 · F +49 (0) 36691 722-20
Info@Linitherm.de · www.Linitherm.de

Installation of the LINITHERM insulation systems on the boarding with eaves board

Creation of the Air/wind tightness

The edgings of the LINITHERM elements are air and wind-tight acc. to tests. However, for the establishment of air tightness, the additional installation of LINITHERM L+D film is recommended!
Connections must be established as follows:
Application of a LINITHERM spray foam bead (for the avoidance of thermal/cold bridges) and Compriband (for the creation of air and wind tightness), between rising brickwork/rafters and LINITHERM L+D film. After the rafters have been positioned, Compriband must be applied in the area of the eaves under the rafters and on the rafter flanking. The Compriband should be compressed to at least 30% of its thickness in installed condition. For the establishment of air tightness, the LINITHERM L+D film should be connected to the rising building components e.g. by means of Compriband or adhesive bead (if necessary pressure plate) such that it is permanently airtight. The boarding in this area is separated or cut out. The remaining cavities are filled in or foamed e.g. with mineral fibre.

Attachment of the eaves board

The eaves board must be properly positioned and attached in the same thickness as the LINITHERM insulation elements parallel to the eaves.

Installation of the LINITHERM elements

The LINITHERM elements are installed flush and parallel to the eaves row by row from bottom to top.
For the individually required waterproofing measures of the LINITHERM elements, please refer to the corresponding installation instructions of the respective element.

Positioning of the counter-lathing

The installation of approx. 2 - 3 rows of LINITHERM elements (depending on the roof pitch), is followed by the assembly of the counter-slats (usually cross-sections 40/60 mm or 40/80 mm).
The attachment of the counter-slat for the absorption of the thrust and suction loads takes place using special screws acc. to the static analysis through the counter-slat in the rafters.

The further structure with roof lathing/roof covering takes place as usual.

Remark: If outer wall insulation (e.g. WDVS) is used, water penetration behind the wall insulation must be avoided by means of suitable bonding or waterproofing to the brickwork.

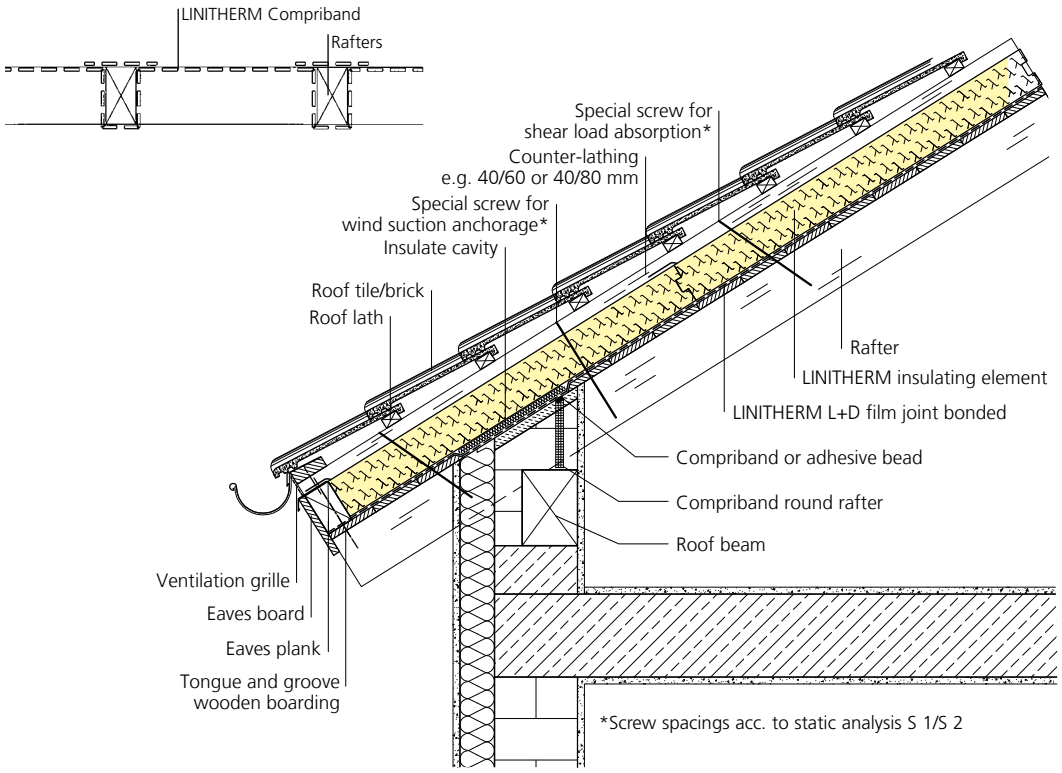

Linzmeier Bauelemente GmbH Industriestraße 21 · 88499 Riedlingen, Germany· **T** +49 (0) 7371 1806-0 · **F** +49 (0) 7371 1806-96
Schortentalstr. 24 · 07613 Heideland b. Eisenberg/Th. Germany ·
T +49 (0) 36691 722-0 · **F** +49 (0) 36691 722-20
Info@Linitherm.de · www.Linitherm.de

V - T eaves 1a

Installation of the LINITHERM insulation systems on the boarding with cleat

This solution is mainly recommended for larger roof overhangs. Of course, the variant with the cleat can also be used for structures without full-surface boarding.

Cleat

The cleat (cleat thickness = insulation thickness) is applied to the boarding sheet.

Creation of the air and wind tightness

Application of a LINITHERM spray foam bead (for the avoidance of thermal/cold bridges) and Compriband (for the establishment of air and wind tightness), between rising brickwork/rafters and LINITHERM L+D film. After the rafters have been positioned, Compriband must be applied in the area of the eaves under the rafters and on the rafter flanking. The Compriband should be compressed to at least 30% of its thickness in installed condition.

sarking membrane

For the establishment of air tightness, the LINITHERM L+D film should be connected to the rising building components e.g. by means of Compriband or adhesive bead (if necessary pressure plate) such that it is permanently airtight. The boarding in this area is separated or cut out. The remaining cavities are filled in or foamed e.g. with mineral fibre.

Installation of the LINITHERM elements

The LINITHERM elements are installed flush and parallel to the eaves row by row from bottom to top.
For the individually required waterproofing measures of the LINITHERM elements, please refer to the corresponding installation instructions of the respective element.

Positioning of the Counter-slat

The installation of approx. 2 - 3 rows of LINITHERM elements (depending on the roof pitch), is followed by the assembly of the counter-slats. The attachment of the counter-slat for the absorption of the thrust and suction loads takes place using special screws acc. to the static analysis through the counter-slat/cleat in the rafters.

The further structure with roof lathing/roof covering takes place as usual.

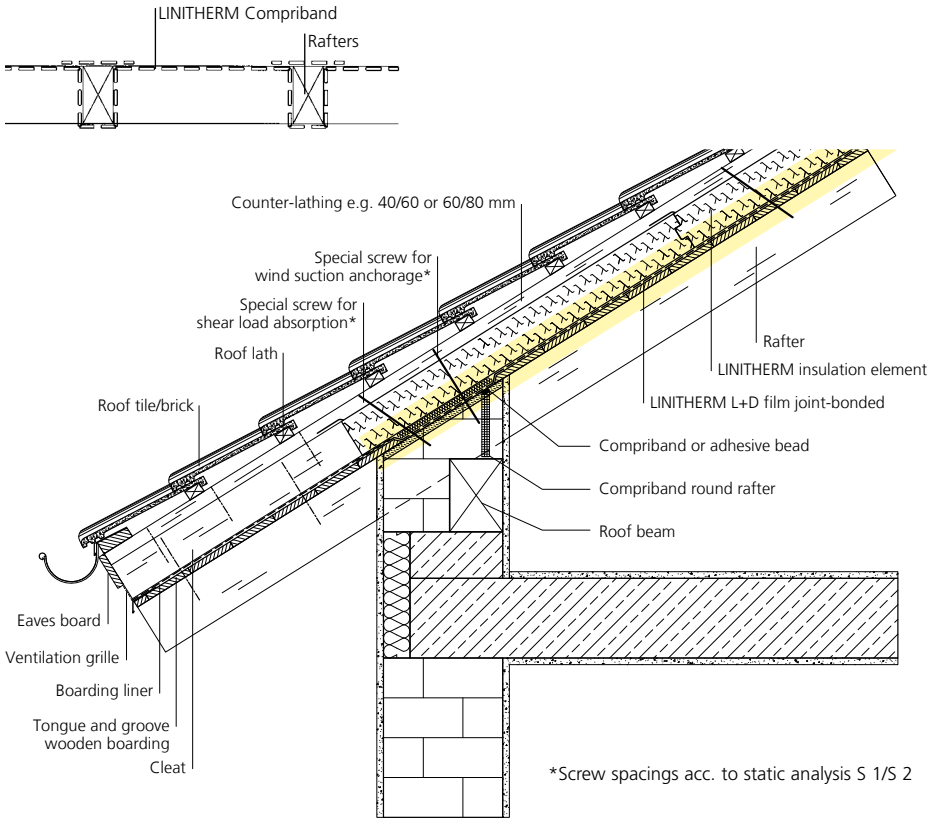

Linzmeier Bauelemente GmbH Industriestraße 21 · 88499 Riedlingen, Germany· T +49 (0) 7371 1806-0 · F +49 (0) 7371 1806-96
Schortentalstr. 24 · 07613 Heideland b. Eisenberg/Th. Germany ·
T +49 (0) 36691 722-0 · F +49 (0) 36691 722-20
Info@Linitherm.de · www.Linitherm.de

Installation of the LINITHERM insulation systems directly on the rafters. LINITHERM PAL SIL T in combination with further LINITHERM insulation systems

Creation of the air tightness/ sarking membrane

LINITHERM PAL SIL T is an additional insulation with integrated building board, which can be combined with most LINITHERM above-rafter insulation systems (except PAL OSB and PGV Flex).
Connections must be established as follows:

After the rafters have been positioned, LINITHERM Compriband must be applied in the area of the eaves (under the rafters and on the rafter flanking, see. illustration below) for the establishment of the air and wind tightness. The area between the rafters is subsequently brick lined. When installed, the Compriband should be compressed to at least 30% of its thickness. The LINITHERM connection apron is then installed in this area, such that the integrated Compriband forms a connection with the tapes around the rafters. After this, the connection apron is guided through the separating joint of the elements and bonded air-tight at the top to the sarking membrane of the PAL SIL T insulation.

Installation of the LINITHERM elements

An eaves board is installed at the height of the two lasers of insulation for the alignment of the first row and for covering the bottom edge of the element.
The PUR insulation can be released here, such that the silicate panel reaches up to the rafter head.
The silicate panel is then screwed to the eaves board.
The elements are installed flush and parallel to the eaves row by row from bottom to top.
(See also installation instructions for element type LINITHERM PAL SIL T.) The elements must be separated in the area of the connections, in order to connect the air-tight planes of the exterior wall and the roof to one another by means of the connection apron as described above.

Positioning of the counter-lathing

After the installation of approx. 2 - 3 rows, the further LINITHERM insulation (see installation instructions for the respective element) are installed, to which the counter-slats are attached in accordance with the static analysis.
if LINITHERM PAL 2UM / PAL HT / PGV HT is used, we recommend the opposing screw connection of the counter-slats with LINIFIX double-thread screws for improved sound insulation.

The roof slats or ancillary slats are immediately mounted as a platform on the counter-slats.
The further structure with roof lathing/roof covering takes place as usual.

Remark: If an exterior wall insulation (e.g. WDVS) is used, water penetration behind the wall insulation must be avoided by suitable bonding or sealing off from the brickwork.

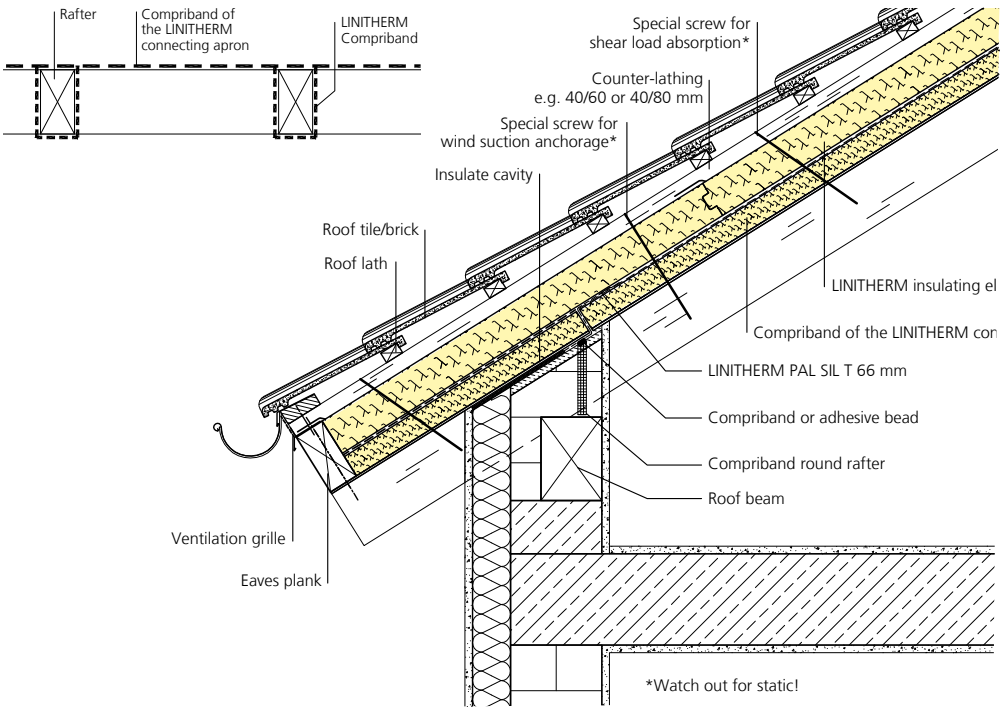

Linzmeier Bauelemente GmbH Industriestraße 21 · 88499 Riedlingen, Germany· **T** +49 (0) 7371 1806-0 · **F** +49 (0) 7371 1806-96
Schortentalstr. 24 · 07613 Heideland b. Eisenberg/Th. Germany ·
T +49 (0) 36691 722-0 · **F** +49 (0) 36691 722-20
Info@Linitherm.de · www.Linitherm.de

V - T eaves 3

Installation of the LINITHERM insulation systems in old and new buildings

If a LINITHERM above-rafter insulation is used in old buildings, the existing cladding on the room side can remain unchanged.
The existing rafters are severed at the outer edge of the pastered brickwork.

Creation of the Air/wind tightness

LINITHERM L+D film is installed over the rafters for the creation of the air tightness.
The L+D film is then glued airtight to the existing exterior plaster and is later covered by the exterior wall insulation.

Positioning of the eaves board

The eaves board must be properly positioned and attached in the same thickness as the LINITHERM insulation elements parallel to the eaves.

Installation of the LINITHERM elements

The LINITHERM elements are installed flush and parallel to the eaves row by row from bottom to top. For the individually required waterproofing measures of the LINITHERM elements, please refer to the corresponding installation instructions of the respective element.

Positioning of the counter-lathing

The installation of approx. 2 - 3 rows of LINITHERM elements (depending on the roof pitch), is followed by the assembly of the counter-slats. The attachment of the counter-slat for the absorption of the thrust and suction loads takes place using special screws acc. to the static analysis through the counter-slat in the rafters.

The further roof structure with roof lathing/roof covering takes place as usual.

Remark: If an exterior wall insulation (e.g. WDVS) is used, water penetration behind the wall insulation must be avoided by suitable bonding or sealing off from the brickwork.

Installation of the LINITHERM insulation systems (rafters clad)

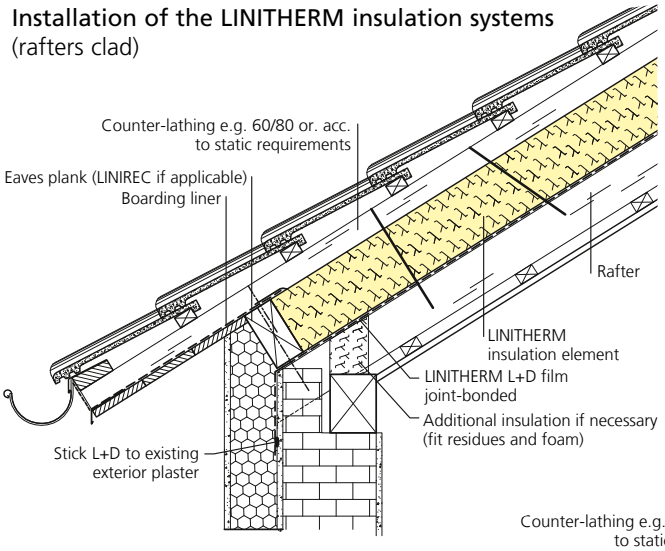

Installation of the LINITHERM insulation systems (exposed rafters with boarding)

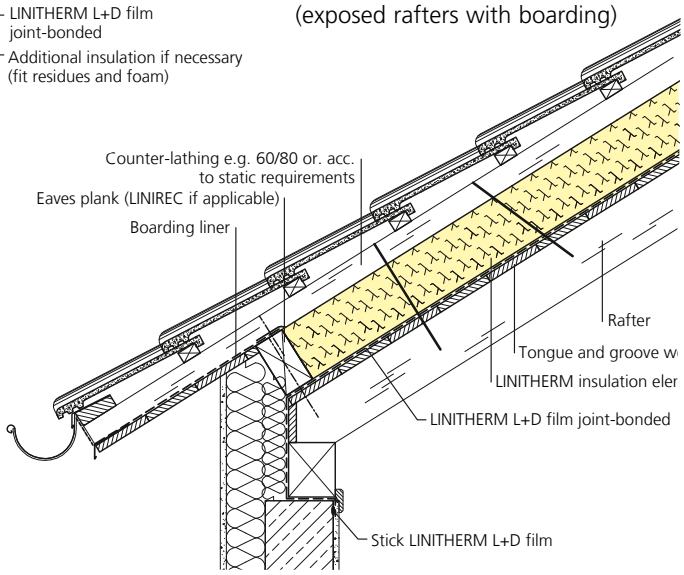

Linzmeier Bauelemente GmbH Industriestraße 21 · 88499 Riedlingen, Germany· T +49 (0) 7371 1806-0 · F +49 (0) 7371 1806-96
Schortentalstr. 24 · 07613 Heideland b. Eisenberg/Th. Germany ·
T +49 (0) 36691 722-0 · F +49 (0) 36691 722-20
Info@Linitherm.de · www.Linitherm.de

Installation of the LINITHERM insulation systems in old buildings

If a LINITHERM above-rafter insulation is used in old buildings, the existing cladding on the room side can remain unchanged.

Creation of the Air/wind tightness

To create air-tightness, LINITHERM PAL residues are fitted in between the rafters and connected air-tight with Compriband. Use spray foam to fill the connecting joint and remaining cavities, (e.g. between rafters and roof beams). Larger cavities can be insulated using a soft insulating material (mineral wool). Connect the LINITHERM L+D film permanently airtight to the rising building components by means of Compriband or adhesive bead.

Installation of the LINITHERM elements

The LINITHERM elements are installed flush and parallel to the eaves row by row from bottom to top.
For the individually required waterproofing measures of the LINITHERM elements, please refer to the corresponding installation instructions of the respective element.

The installation of approx. 2 - 3 rows of LINITHERM elements (depending on the roof pitch), is followed by the assembly of the counter-slats (usually cross-sections 40/60 mm or 40/80 mm). The attachment of the counter-slat for the absorption of the thrust and suction loads takes place using special screws acc. to the static analysis through the counter-slat in the rafters.

The further roof structure with roof lathing/roof covering takes place as usual.

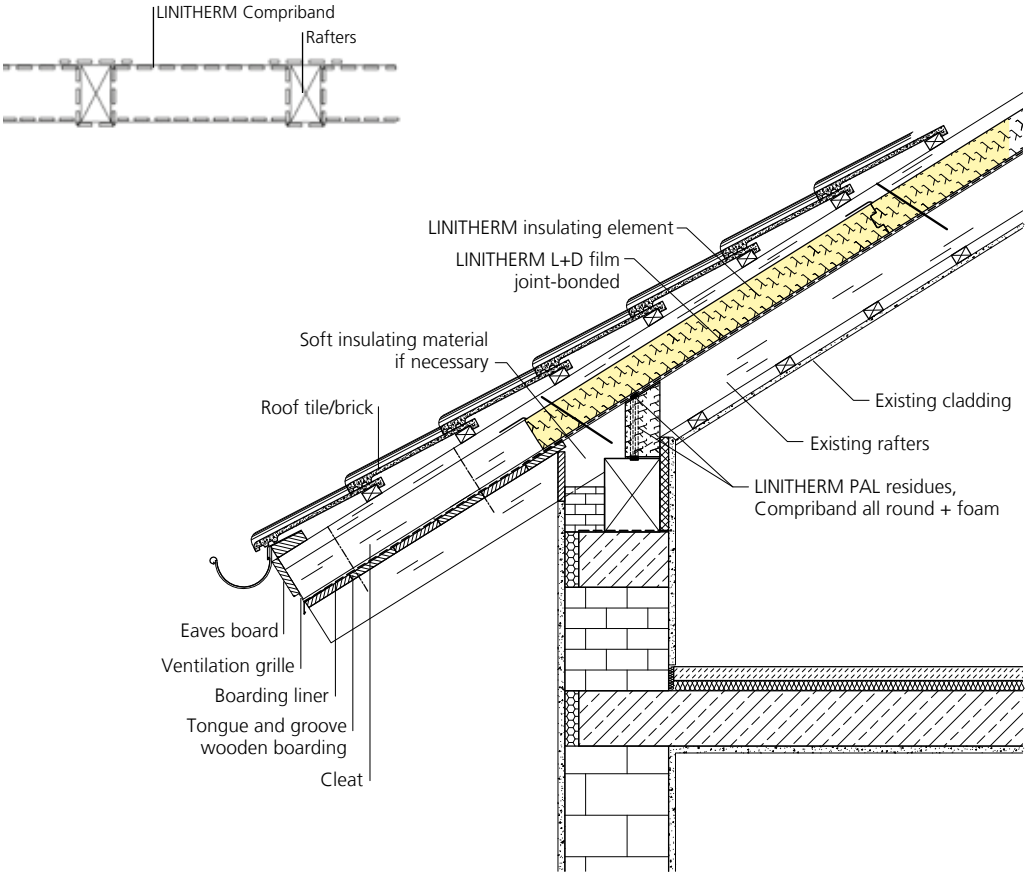

Linzmeier Bauelemente GmbH Industriestraße 21 · 88499 Riedlingen, Germany· **T** +49 (0) 7371 1806-0 · **F** +49 (0) 7371 1806-96
Schortentalstr. 24 · 07613 Heideland b. Eisenberg/Th. Germany ·
T +49 (0) 36691 722-0 · **F** +49 (0) 36691 722-20
Info@Linitherm.de · www.Linitherm.de

V - T verge 1

Verge with externally positioned rafters, installation of the LINITHERM insulation systems on full-surface boarding.

In order to establish air tightness at the verge, the L+D film on the ring belt/ring beam is connected airtight to the rising building components e.g. by means of Compriband or adhesive bead and pressure plate (casing board) or LINITHERM PGV. The boarding in this area is separated or cut out.
The remaining cavities are filled in or foamed e.g. with a soft insulating material.
The LINITHERM elements are installed at least up to the outer edge of the brickwork/exterior wall insulation. If external wall insulation is applied, the wall insulation is tight and must be tightly connected to the roof insulation.
The further roof structure with roof lathing/roof covering takes place as usual.

Remark: If an exterior wall insulation (e.g. WDVS) is used, water penetration behind the wall insulation must be avoided by suitable bonding or sealing off from the brickwork.

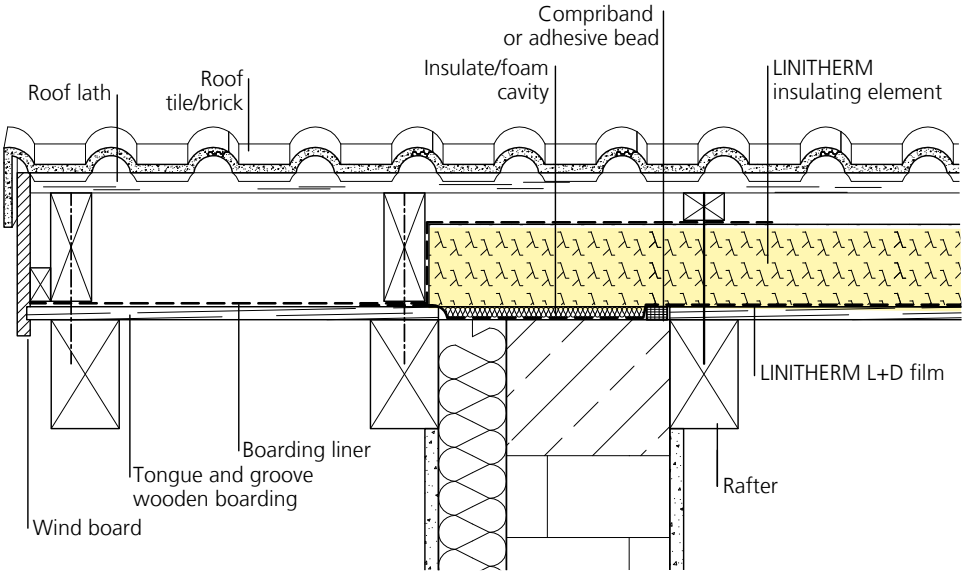

V - T verge 1a

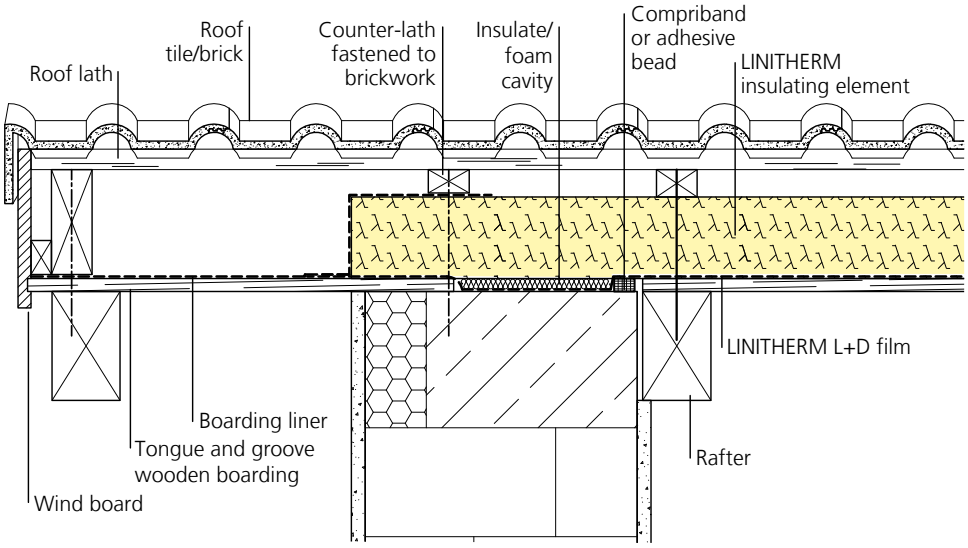

Linzmeier Bauelemente GmbH Industriestraße 21 · 88499 Riedlingen, Germany· T +49 (0) 7371 1806-0 · F +49 (0) 7371 1806-96
Schortentalstr. 24 · 07613 Heideland b. Eisenberg/Th. Germany ·
T +49 (0) 36691 722-0 · F +49 (0) 36691 722-20
Info@Linitherm.de · www.Linitherm.de

Verge without externally positioned rafters, installation on boarding

V - T verge 2

Establishment of air tightness with LINITHERM L+D film (see verge 1).

Remark: If an exterior wall insulation (e.g. WDVS) is used, water penetration behind the wall insulation must be avoided by suitable bonding or sealing off from the brickwork.

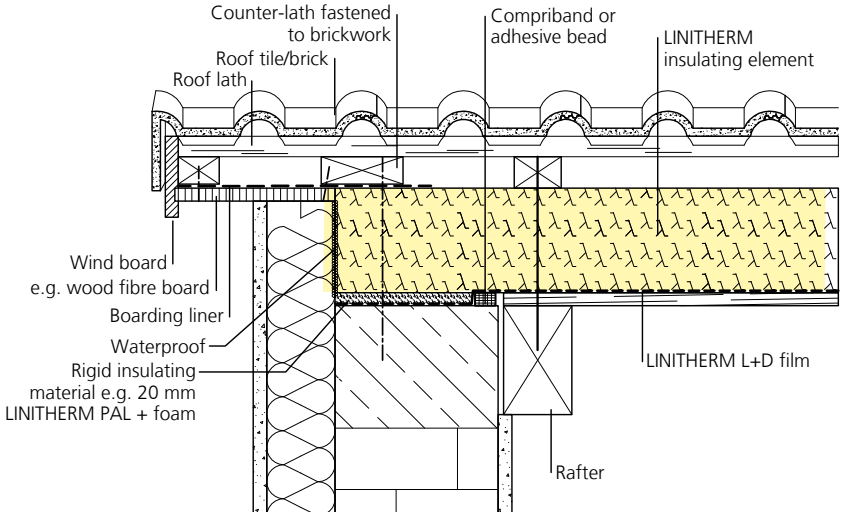

Verge with externally positioned rafters, installation directly on the rafters LINITHERM PAL SIL T in combination with further LINITHERM insulation systems

V - T verge 3

Establishment of air tightness with LINITHERM connection apron (see verge 2).

Remark: If an exterior wall insulation (e.g. WDVS) is used, water penetration behind the wall insulation must be avoided by suitable bonding or sealing off from the brickwork.

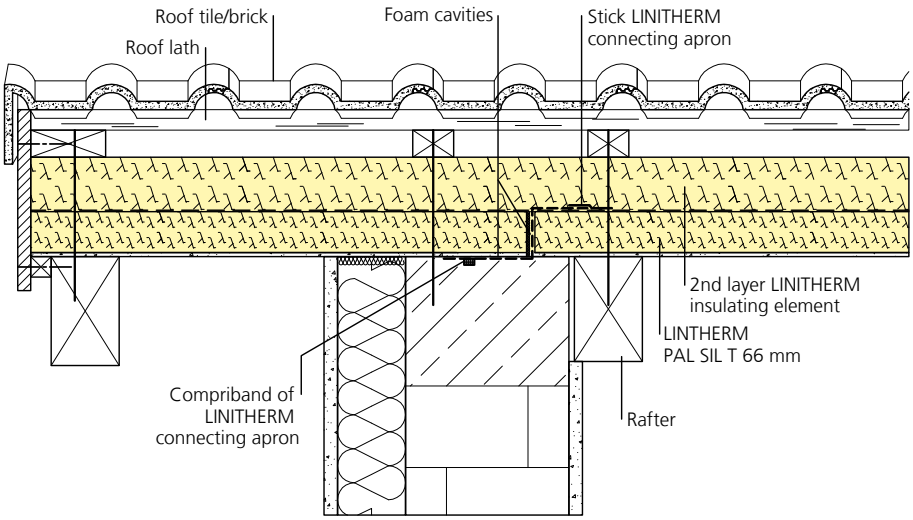

Linzmeier Bauelemente GmbH Industriestraße 21 · 88499 Riedlingen, Germany· **T** +49 (0) 7371 1806-0 · **F** +49 (0) 7371 1806-96
Schortentalstr. 24 · 07613 Heideland b. Eisenberg/Th. Germany ·
T +49 (0) 36691 722-0 · **F** +49 (0) 36691 722-20
Info@Linitherm.de · www.Linitherm.de

V - T verge 4

Verge, old building

Establishment of air tightness with LINITHERM L+D film (see verge 1).
The L+D film is then glued airtight to the existing exterior plaster and is later covered by the exterior wall insulation.

Remark: If outer wall insulation (e.g. WDVS) is used, water penetration behind the wall insulation must be avoided by means of suitable bonding or waterproofing to the brickwork.

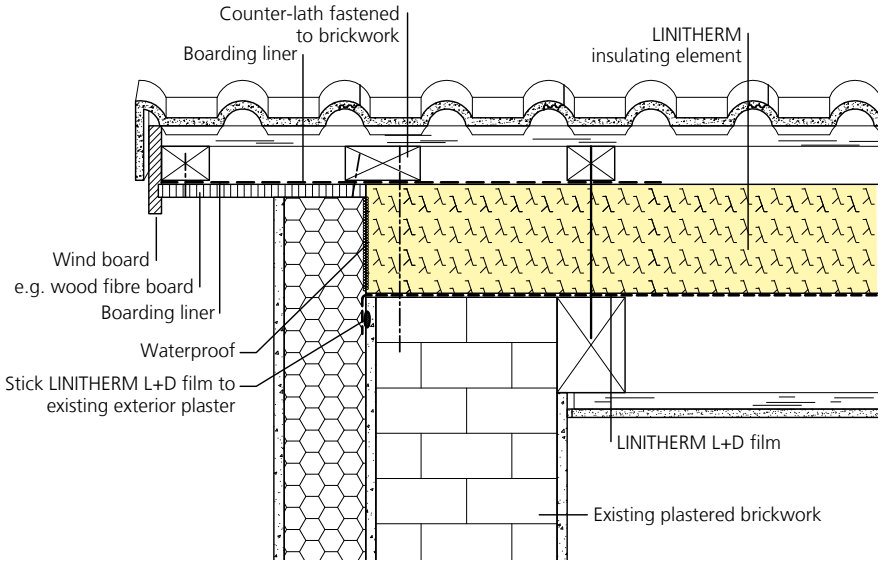

V - T verge 5

Verge, old building

Establishment of air tightness with LINITHERM L+D film (see verge 1).

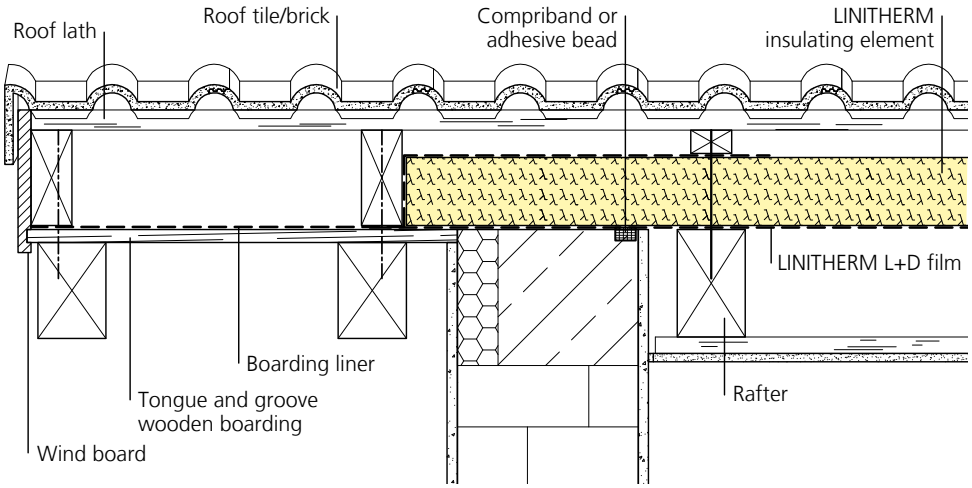

Ridge

An absolutely tight connection must also be created on the ridge for homogeneous thermal insulation. The panels should be cut to size in such a way that a narrow groove results. This groove is filled in with LINITHERM spray foam. The overflowed foam can be cut off tidily after hardening. Waterproofing takes place using LINITHERM butyl adhesive tape, except for elements with diffusible sarking membrane. In this case, waterproofing takes place using LINITHERM T adhesive tape.

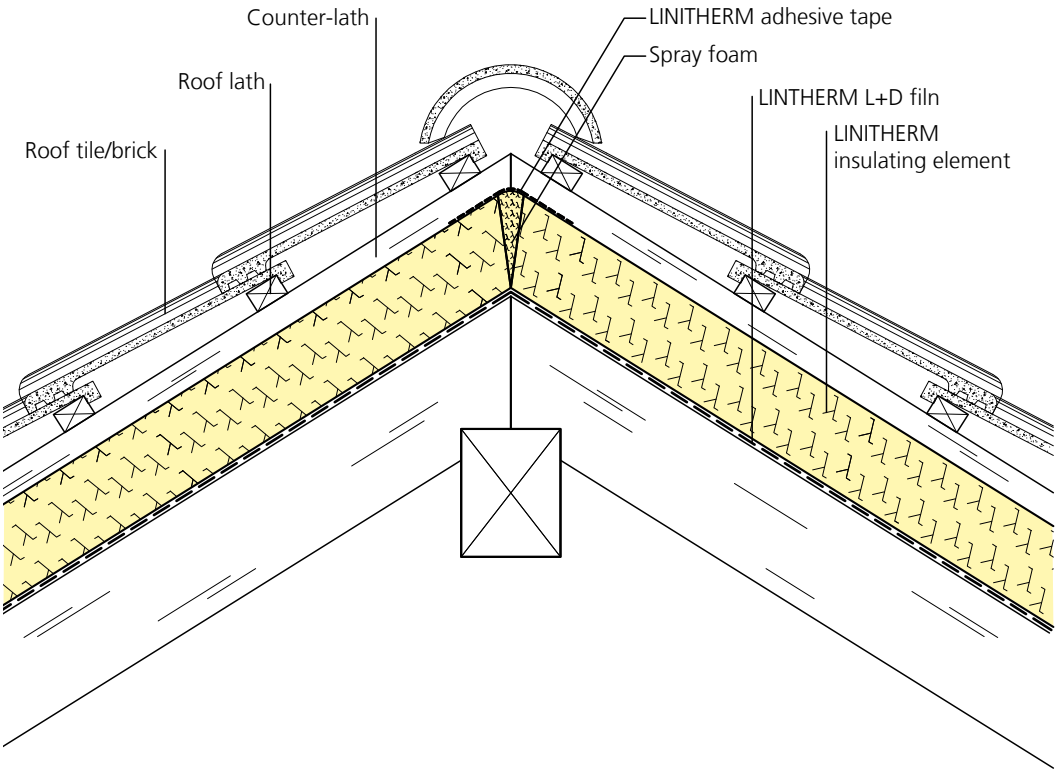

Linzmeier Bauelemente GmbH Industriestraße 21 · 88499 Riedlingen, Germany· **T** +49 (0) 7371 1806-0 · **F** +49 (0) 7371 1806-96
Schortentalstr. 24 · 07613 Heideland b. Eisenberg/Th. Germany ·
T +49 (0) 36691 722-0 · **F** +49 (0) 36691 722-20
Info@Linitherm.de · www.Linitherm.de

V - Dff roof surfce window

Roof surface window

The installation instructions of the window manufacturer must always be observed.
Usually, the LINITHERM insulation is installed over the full surface.
The insulation must be cut to size for a perfect fit with a hand saw/hand-held circular saw prior to installation of the window.
Depending on the type of window, the corresponding preliminary work needs to be carried out (double lathing etc.).
The use of the LITEC skylight frame DDZ (system "Roto" or system "Velux") as an accessory is recommended. This is then on site mitred in accordance with the size of the skylight, screwed at the corners using brackets and fastened to the facing frame of the skylight. If necessary, a thin sealing tape/Compriband is stuck in between the skylight insulation frame and the facing frame/ insulating block of the skylight. After this, the skylight is installed with the insulating frame and the LITEC skylight insulation frame is screwed into the rafters/transition through the LINITHERM elements. The connection between the skylight (or outside skylight connection apron) and the sarking membrane of the main roof is made using LNITHERM adhesive tape.

A water drainage channel, a deflection board or bracket is attached in a slanting position above the skylight to drain off any existing moisture.
Finally, the lathing is extended on the outside, the end corner frame is mounted, and the roof covered.

Work on the room side

An absolutely properly installed vapour barrier on the room side and additional thermal insulation is necessary and is to be tidily inserted (see cross section drawings).
The skylight film strip is connected to the UD angular profile by means of adhesive (adhesive tape or adhesive compound) and pressure plate (pushed in between insulation element and boarding).
The cavities must be filled in with a soft insulating material. Finally, the assembly of the skylight lining takes place.

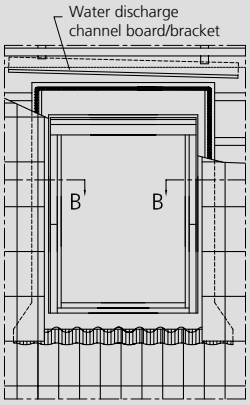

Cross-section B-B, system Velux

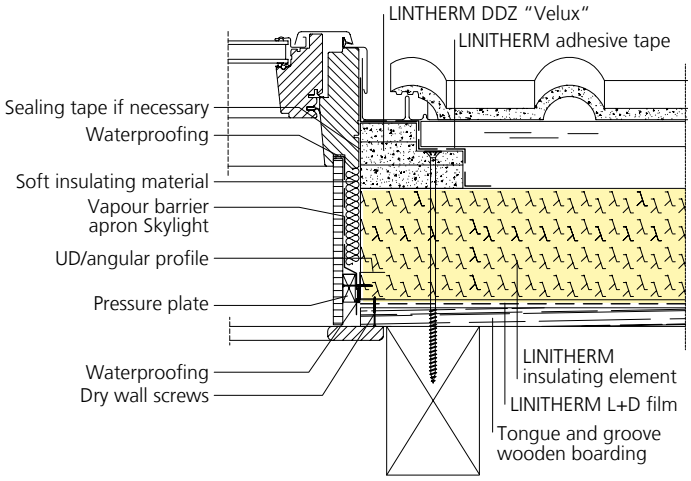

Cross-section B-B, system Roto

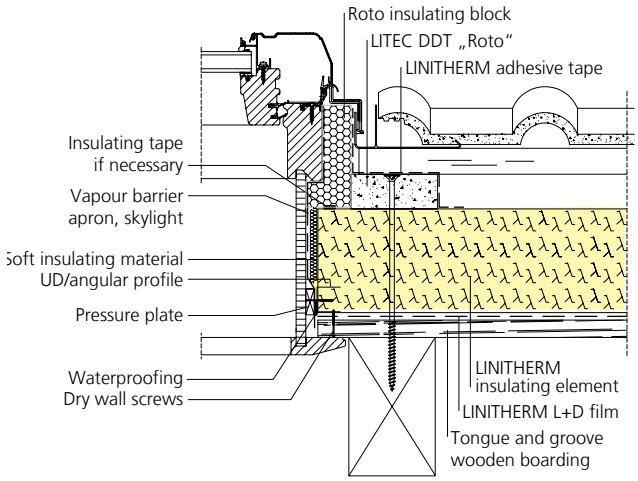

Linzmeier Bauelemente GmbH Industriestraße 21 · 88499 Riedlingen, Germany· T +49 (0) 7371 1806-0 · F +49 (0) 7371 1806-96
Schortentalstr. 24 · 07613 Heideland b. Eisenberg/Th. Germany ·
T +49 (0) 36691 722-0 · F +49 (0) 36691 722-20
Info@Linitherm.de · www.Linitherm.de

Gable

The LINITHERM elements are installed on pitched dormers and sloped dormers as on the remaining roof surface.

The connection panels are cut to size with a narrow groove in accordance with the drawing shown below. The resulting cavity is foamed and the excess foam cut off. After this the LINITHERM adhesive tape is applied.

Attachment of the counter-lathing takes place as usual (acc. to static analysis).

The further structure with roof lathing/collar plate/roof covering takes place as usual.

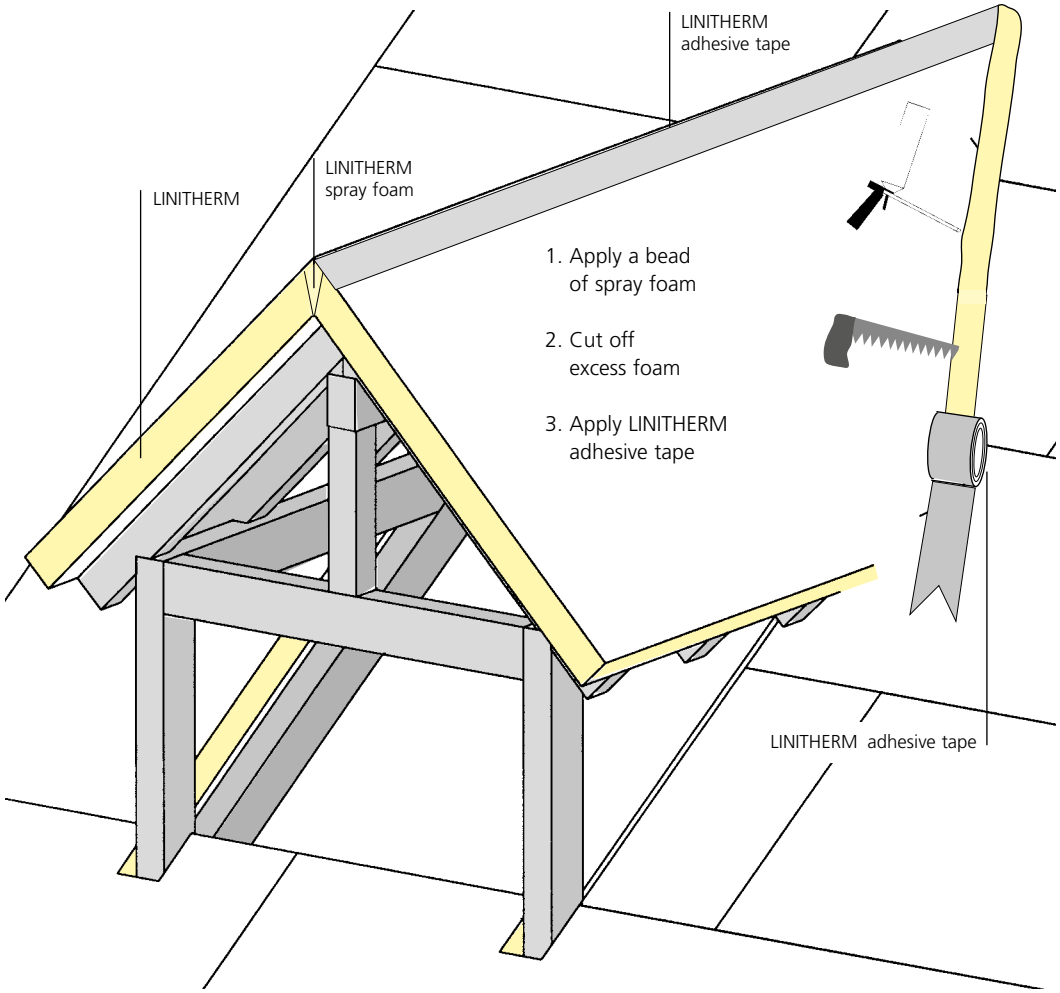

Instead of the conventional wooden-based gables, LITEC GBS offers gable systems.
(See LITEC GBS gable construction systems "general instructions and examples for assembly")

Linzmeier Bauelemente GmbH Industriestraße 21 · 88499 Riedlingen, Germany· **T** +49 (0) 7371 1806-0 · **F** +49 (0) 7371 1806-96
Schortentalstr. 24 · 07613 Heideland b. Eisenberg/Th. Germany ·
T +49 (0) 36691 722-0 · **F** +49 (0) 36691 722-20
Info@Linitherm.de · www.Linitherm.de

V - K Chimney connection

Chimney connection

No flammable material may connect directly to the chimney, depending on the exhaust gas temperature. For this purpose, the respective Landesbauordnungen (regional building laws) or the information provided by the local sweep must be observed.

The LINITHERM elements are cut to size and positioned at the specified clearance from the chimney.
The remaining intermediate space to the chimney is filled e.g. with mineral fibre insulation material (building material class A1).
Above this, LINITHERM adhesive tape is to be attached from the chimney through to the LINITHERM insulation.

The further structure with roof lathing/sheet metal coverings/roof covering takes place as usual.

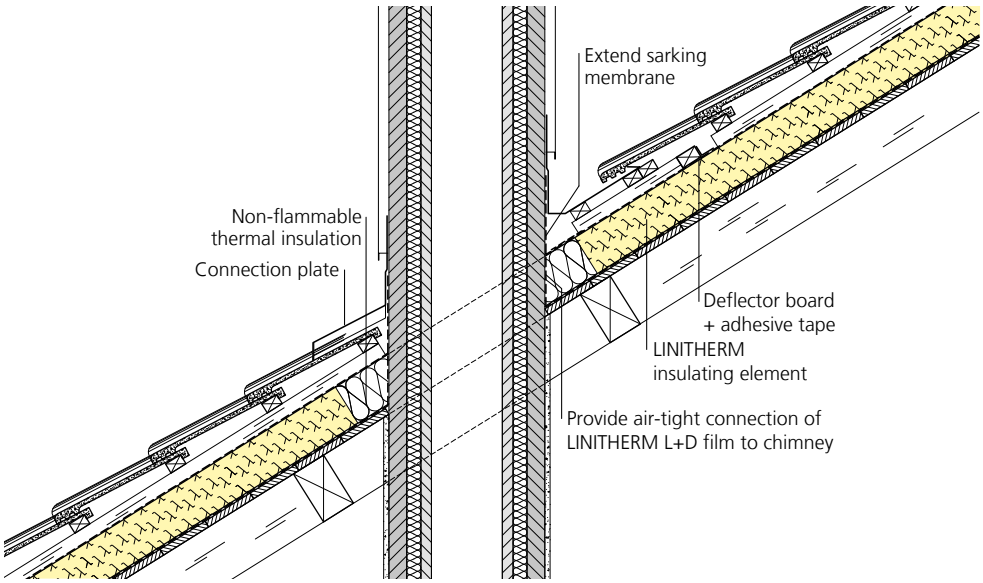

V - DR vapour pipe

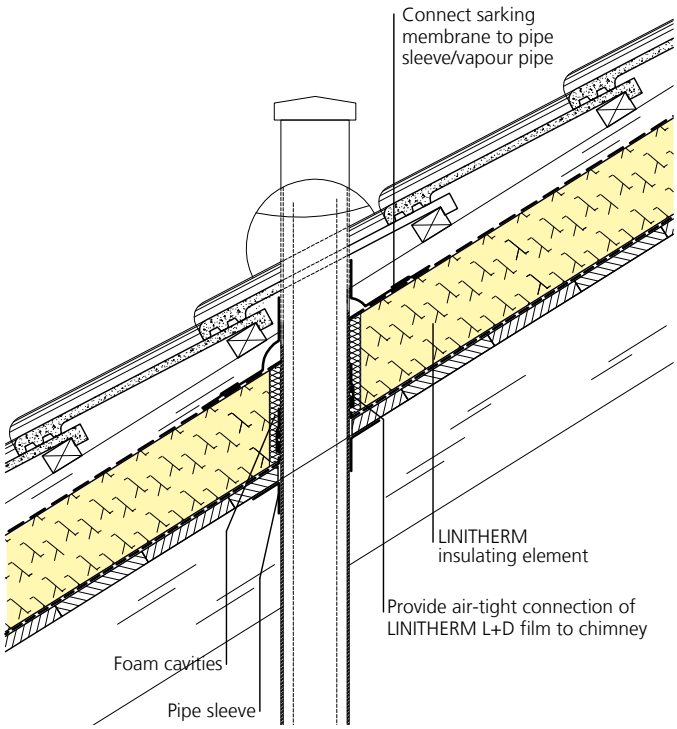

Linzmeier Bauelemente GmbH Industriestraße 21 · 88499 Riedlingen, Germany· T +49 (0) 7371 1806-0 · F +49 (0) 7371 1806-96
Schortentalstr. 24 · 07613 Heideland b. Eisenberg/Th. Germany ·
T +49 (0) 36691 722-0 · F +49 (0) 36691 722-20
Info@Linitherm.de · www.Linitherm.de

Waterproof under-roof with LINITHERM U-Plus sheeting

If the rules of the ZVDH (Central Organisation of the German Roofing Trade) require a waterproof under-roof, then bonding or welding of a separate under-roof layer to the overlaps is necessary.

In accordance with the guidelines of the ZVDH, the waterproof under-roof must also be guided over the counter-slat, so that it is not exposed to moisture. As the counter-slats however usually hold a residual wood moisture, this would mean that this moisture is enclosed underneath the under-roof layer and may lead to damage to the counter-lathing. In this case, LINIREC WdU profile has the remedy. It consists of dry, recycled PUR/PIR rigid foam, is pressure-resistant and rot-proof.

The LINIREC WdU profile is attached underneath the under-roof for the fixation of the insulation. The counter-slat can be fastened as usual after installation of the under-roof Conclusion: the counter-slat does not touch the water-draining layer and the enclosed LINIREC WdU-profile cannot rot.

Waterproof under-roof with WDU profile

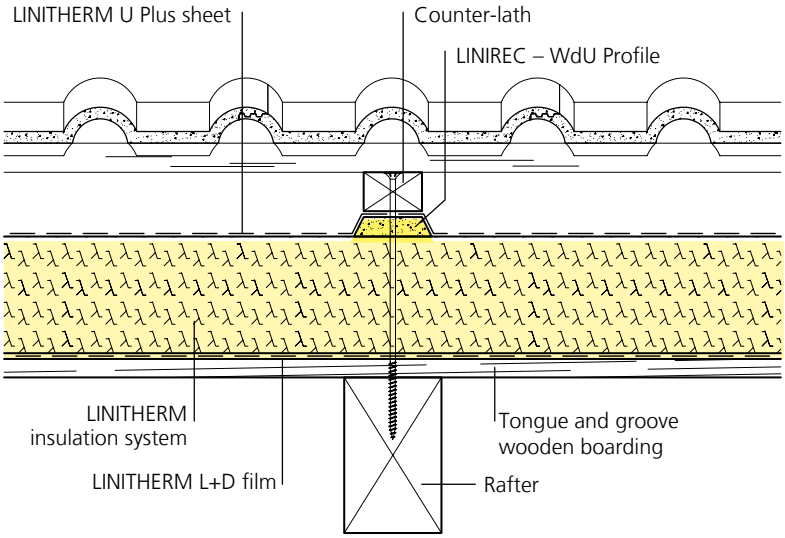

Waterproof under-roof without WDU profile

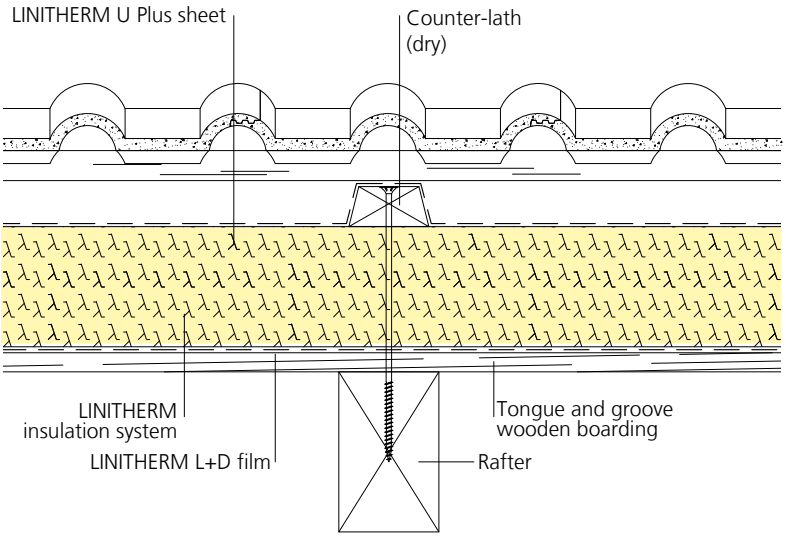

Linzmeier Bauelemente GmbH Industriestraße 21 · 88499 Riedlingen, Germany· **T** +49 (0) 7371 1806-0 · **F** +49 (0) 7371 1806-96
Schortentalstr. 24 · 07613 Heideland b. Eisenberg/Th. Germany ·
T +49 (0) 36691 722-0 · **F** +49 (0) 36691 722-20
Info@Linitherm.de · www.Linitherm.de

V - W

Residential partition wall

Longitudinal sound insulation via residential partition walls or sound insulation between various residential units can take place e.g. according to the solution options shown here, depending on local requirements.

LINITHERM PAL
on rafters

Evaluated laboratory sound reduction measurement
$R_{Lw,P}$ = 65 dB
Mathematical value
$R_{Lw,R}$ = 63 dB

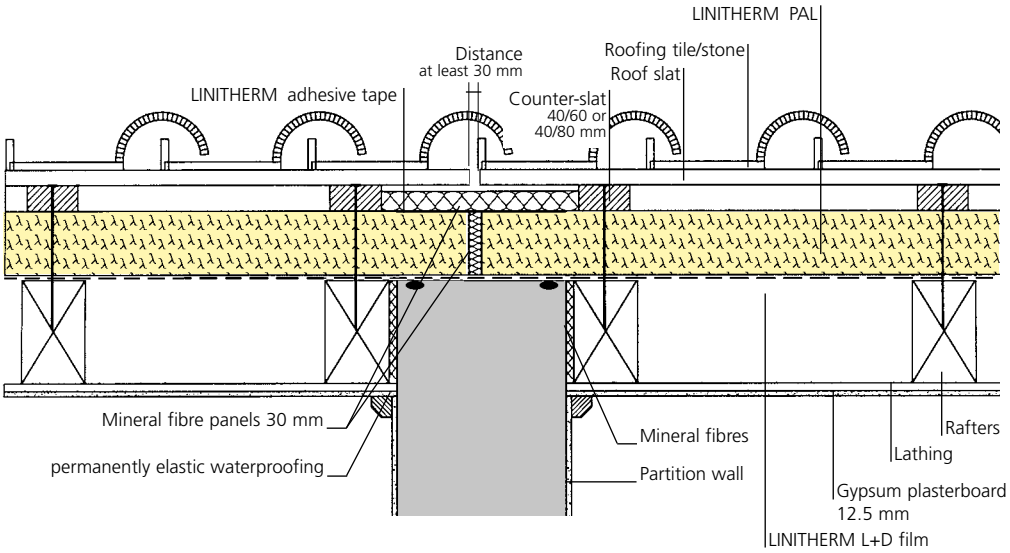

LINITHERM PAL
On boarding

Evaluated laboratory Sound reduction measurement
$R_{Lw,P}$ = 62 dB
Mathematical value
$R_{Lw,R}$ = 60 dB

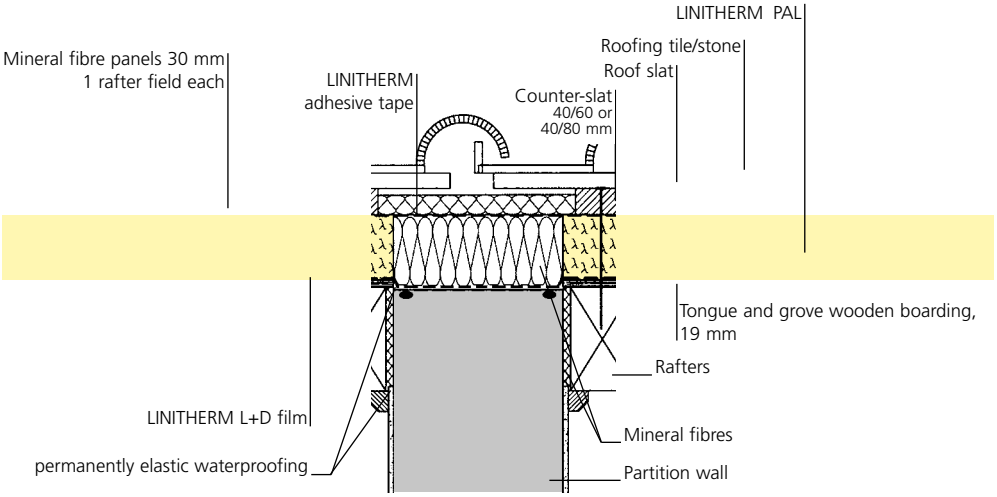

Linzmeier Bauelemente GmbH Industriestraße 21 · 88499 Riedlingen, Germany· T +49 (0) 7371 1806-0 · F +49 (0) 7371 1806-96
Schortentalstr. 24 · 07613 Heideland b. Eisenberg/Th. Germany ·
T +49 (0) 36691 722-0 · F +49 (0) 36691 722-20
Info@Linitherm.de · www.Linitherm.de

House partition wall

V - H

Longitudinal sound insulation via partition walls of semi-detached and terraced housing can take place e.g. according to the solution options shown here, depending on local requirements.

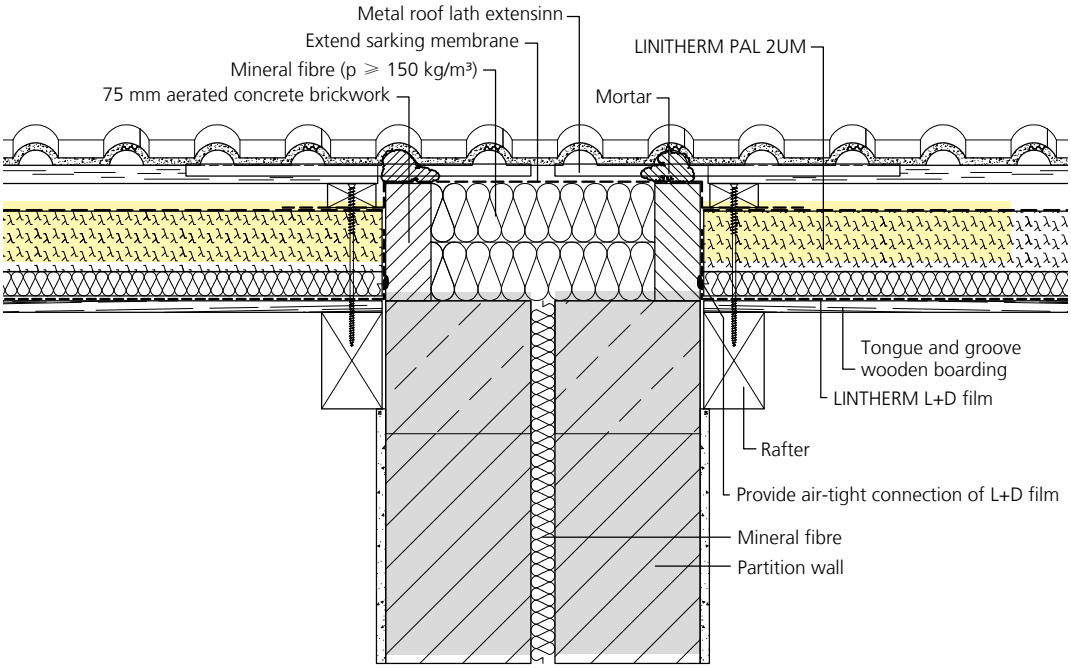

LINITHERM PAL 2UM on rafters

Sound reduction measurement
R_{Lw} = ca. 70 dB*

* Sound reduction measurement results from the following examinations

- Test report 04/06/26.V03, LSW Labor für Schall- und Wärmemesstechnik GmbH, Stephanskirchen, Germany (Determination of the sound reduction measurement of a roof structure with LINITHERM PAL 2UM, R_w = 44 dB)
- Final report 4149, Kurz und Fischer GmbH, Winnenden, Germany (correction term K = 26-28 dB for the depicted version)

Linzmeier Bauelemente GmbH Industriestraße 21 · 88499 Riedlingen, Germany· **T** +49 (0) 7371 1806-0 · **F** +49 (0) 7371 1806-96
Schortentalstr. 24 · 07613 Heideland b. Eisenberg/Th. Germany ·
T +49 (0) 36691 722-0 · **F** +49 (0) 36691 722-20
Info@Linitherm.de · www.Linitherm.de

LINITHERM assembly instructions including the ZVDH guidelines

ZVDH set of rules

Classification of the LINITHERM steep roof insulation systems acc. to table 1 of the "Leaflet for under-roofs, sarking membranes and underbracing" and corresponding with table 1.1 of the "Expert regulations for roof tiles and concrete tiles".

LINITHERM product	Roof pitch (DN) depending on the standard roof pitch (RDN) of the roofing tile	Roof pitch (DN) at least	maximum number increased requirements	Type	Class
PAL N+F, PAL 2, PGV 2 *with U Plus sheeting above area and counter-slat*	DN ≥ RDN – 12°	at least 10°	3 if DN ≥ (RDN-12°)	waterproof under-roof	1
PAL 2U Plus *with UD masking strip above the counter-slat*	DN ≥ RDN – 12°	at least 12°	3 if DN ≥ (RDN-12°)	waterproof under-roof	1
PAL 2U Plus *with nail seal*	DN ≥ RDN – 12°	at least 12°	4 if DN ≥ (RDN-8°) 1 if DN ≥ (RDN-12°)	rainproof under-roof	2
PAL Polymer, PAL 2U Plus *with nail seal*	DN ≥ RDN – 8°	at least 14°	3 if DN ≥ (RDN-8°)	seamless and perforation-proof sarking membrane	3
PAL N+F, PAL 2U, PAL 2UM, PAL HT, PGV T, PGV HT *with nail seal*	DN ≥ RDN – 8°	at least 20°	3 if DN ≥ (RDN-8°)	seamless and perforation-proof Sarking membrane	3
PAL Polymer, PAL 2U, PAL 2U Plus, PAL 2UM, PAL HT, PGV T, PGV HT *without nail seal*	DN ≥ RDN	at least 20°	3 if DN ≥ RDN	welded or bonded sarking membrane	4
PAL N+F *without nail seal*	DN ≥ RDN	at least 20°	2 if DN ≥ RDN	overlapped or interlocked Sarking membrane	5

Increased requirements are:
- roof pitch less inclined than standard gradient
- special structural features
- use of the attic storey in particular for residential purposes
- climatic conditions
- local provisions

The classifications stated in the table are minimum measures.
Particular climatic conditions, exposed position of the building, great distances from the ridge to the eaves, valleys, roof gables, installations, on-roof or in-roof systems or other special requirements need a higher-level classification.
A higher additional measure needs to be chosen in case of particular local provisions.
Higher-level classifications can generally be applied, even instead of the minimum classifications.

Linzmeier Bauelemente GmbH Industriestraße 21 · 88499 Riedlingen, Germany· **T** +49 (0) 7371 1806-0 · **F** +49 (0) 7371 1806-96
Schortentalstr. 24 · 07613 Heideland b. Eisenberg/Th. Germany ·
T +49 (0) 36691 722-0 · **F** +49 (0) 36691 722-20
Info@Linitherm.de · www.Linitherm.de

Annex to:
LINITHERM assembly instructions including the ZVDH guidelines

Temporary roofing

Excerpt from the ZVDH set of rules:
"Temporary roofing may be necessary for roofs used for residential purposes and/or thermally insulated roofs".

Recommendations
With regard to the suitability as temporary roofing, the following details must be observed for LINITHERM over-rafter insulation systems with sarking function:

Insulation system	Prerequisites for temporary roofing suitability
LINITHERM PAL N+F	Nail seal underneath the counter-lathing
	do not screw into the longitudinal joint tapering (see illustration on the right)
	Adhesive tape points clean, dust-free, grease-free and dry
	Carefully stick on joint/adhesive tape,
	Use LINITHERM butyl adhesive tape 1.0 mm
	No bonding in standing water
	max. outdoor exposure to weather 6 weeks
LINITHERM PAL Polymer	Nail seal underneath the counter-lathing
	Adhesive tape points and overlapped bonding clean, dust-free, grease-free and dry
	Carefully stick on overlap bonding/adhesive tapes
	Use LINITHERM butyl adhesive tape 1.0 mm
	No bonding in standing water
	max. outdoor exposure to weather 4 weeks
LINITHERM PAL 2U, PAL 2U Plus, PAL 2UM, PAL HT, PGV HT, PGV T	Nail seal underneath the counter-lathing
	Adhesive tape points and overlapped bonding clean, dust-free, grease-free and dry
	Carefully stick on overlap bonding/adhesive tapes
	Use LINITHERM T adhesive tape
	No bonding in standing waterr
	max. outdoor exposure to weather 4 weeks

Longitudinal joint from **LINITHERM PAL N+F:** Do not screw into tapering

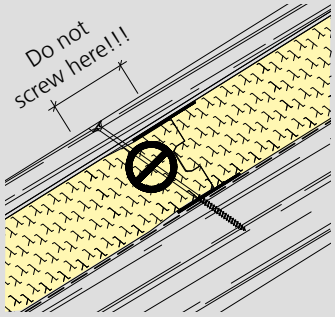

The sarking membranes used comply with class UDB-A of the ZVDH and have been tested for use as temporary roofing by the TU Berlin.
LINITHERM PAL N+F was successfully tested at the TU Berlin with longitudinal and transversal joint (T-joint) and therefore fulfils the requirements for suitability as temporary roofing.

LINITHERM accessories are coordinated to the insulation systems and are approved.
Suitable accessories:
- LINITHERM nail seal
- LINITHERM adhesive tape butyl rubber (1.0 mm), processing temperature +5 °C to +40 °C
- LINITHERM joint tape for PAL N+F, processing temperature +5 °C to +40 °C
- LINITHERM T-adhesive tape for PAL 2U, PAL 2U Plus, PAL 2UM, PAL HT, PGV HT and PGV T, Processing temperature +5 °C to +40 °C
- LINIFIX special screws/double thread screws
- LINITHERM UD masking strip

We generally recommend, due to the various weather conditions (e.g. heavy rain) the rapid covering with the appropriate roofing material.
We recommend that you even off in rooms requiring particular protection or in case of longer outdoor weather exposure as always.

Linzmeier Bauelemente GmbH Industriestraße 21 · 88499 Riedlingen, Germany· **T** +49 (0) 7371 1806-0 · **F** +49 (0) 7371 1806-96
Schortentalstr. 24 · 07613 Heideland b. Eisenberg/Th. Germany ·
T +49 (0) 36691 722-0 · **F** +49 (0) 36691 722-20
Info@Linitherm.de · www.Linitherm.de

Installation instructions for element type LINITHERM PAL N+F

The LINITHERM PAL N+F elements are closely fitted together on the longitudinal and transversal sides. The elements are installed row by row from bottom to top parallel to the eaves. When doing so, the longitudinal overlap of the elements always faces downwards, such that any moisture that may be formed is reliably drained off the under-roof.

As soon as a row of elements has been installed, the joints on the transversal side are masked with the already cut LINITHERM joint tape. The surfaces of the elements must be clean, dry and free of grease in the adhesive area. Immediately press joint tape on firmly.

The LINITHERM PAL N+F elements can be used both sides. This enables low-waste installation of the thermal insulation and installation from left to tight or right to left.

After installing 2 - 3 rows, the counter-slats are attached immediately according to the static analysis. If necessary, apply LINITHERM mail sealing tape underneath the counter-lathing. The roof slats or ancillary slats are immediately mounted as a platform on the counter-slats.

LINITHERM PAL N+F elements fulfil the requirements on a seamless and perforation-proof sarking membrane with a roof pitch less inclined than standard gradient by up to 8° (minimum roof pitch 20°) In accordance with the set of rules of the "Deutschen Dachdeckerhandwerks" (Jan. 2010) in conjunction with the LINITHERM nil sealing tape.
See also: "LINITHERM assembly instructions including the ZVDH guidelines".

Otherwise the instructions from our sheet "General information and examples regarding the installation of LINITHERM above-rafter insulation systems".must be observed.

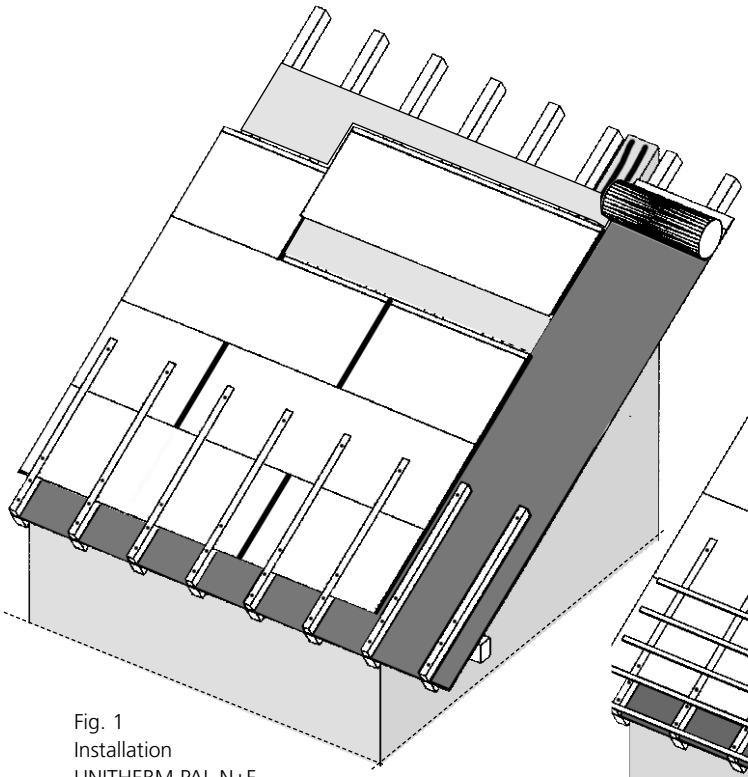

Fig. 1
Installation
LINITHERM PAL N+F
directly on the rafters
with LINITHERM L+D film

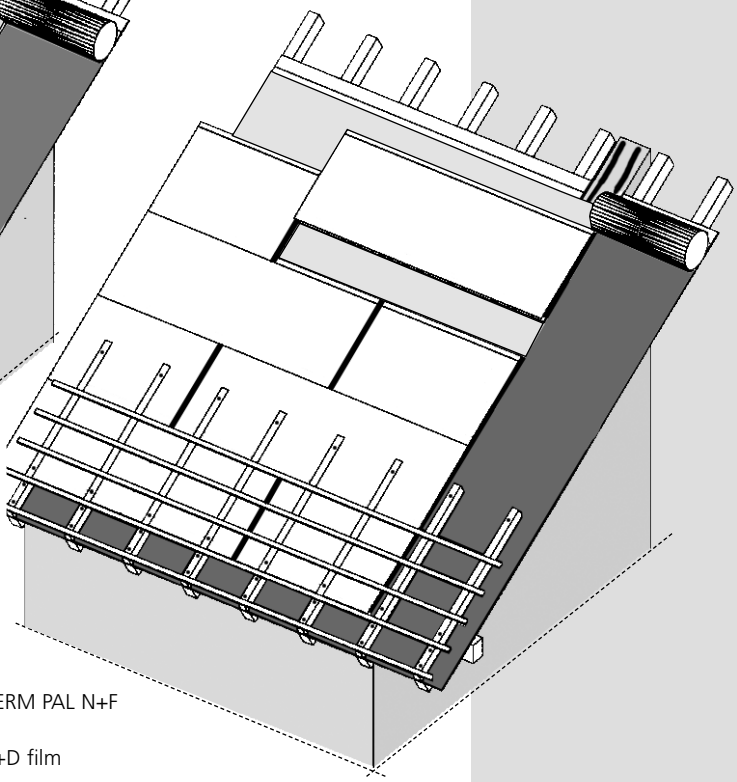

Fig. 2
Installation LINITHERM PAL N+F
On boarding
with LINITHERM L+D film

Linzmeier Bauelemente GmbH Industriestraße 21 · 88499 Riedlingen, Germany· **T** +49 (0) 7371 1806-0 · **F** +49 (0) 7371 1806-96
Schortentalstr. 24 · 07613 Heideland b. Eisenberg/Th. Germany ·
T +49 (0) 36691 722-0 · **F** +49 (0) 36691 722-20
Info@Linitherm.de · www.Linitherm.de

Low-waste installation in the valley

T 1a
LINITHERM PAL N+F

Usually, all elements required for the valley are cut to size and subsequently completely installed.

1. Representation valley

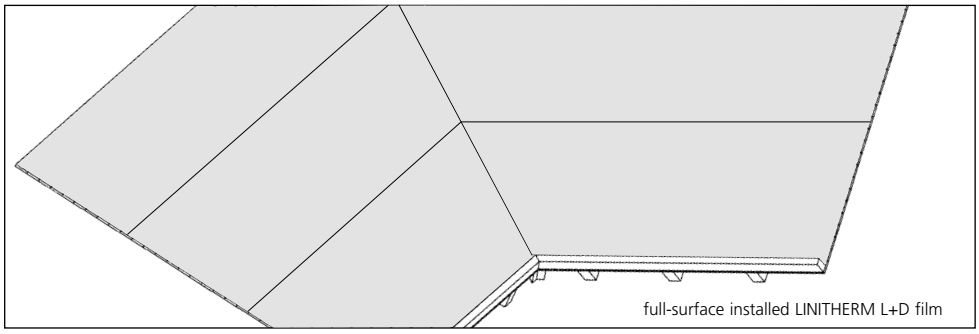

2. Row 1
Slanting cut for valley

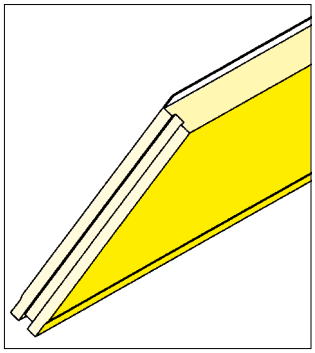

1. Cut off hard fibre strip on one side of the LINITHERM insulating element and PUR/PIR-tongue ...

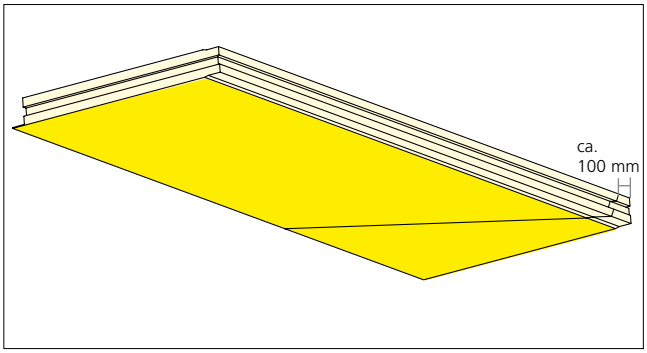

2. ... Saw slanting cut for valley, ...

3. Row 1
Install insulating panel beginning in the valley

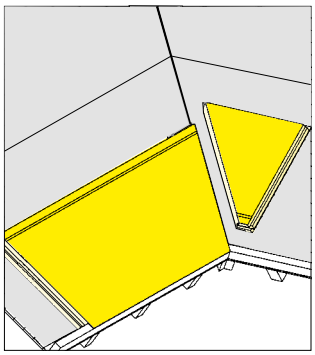

3. ... Place main piece of panel into the valley (overlapping lies of boarding plank), turn residual piece...

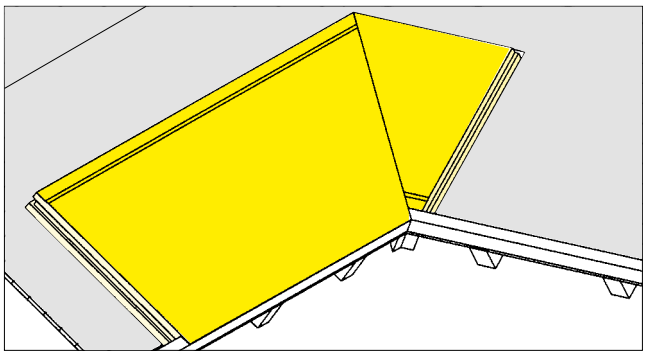

4. ... Install remaining piece in the valley with the sawn edge against the main piece ...

4. Row 2
and other slanting cuts for the valley

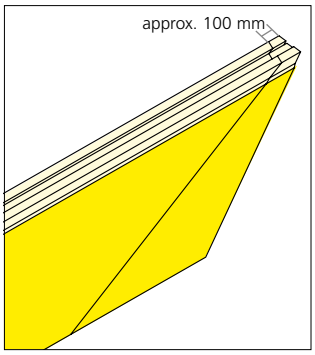

5. Saw a slanting cut for the valley on a further insulation element...

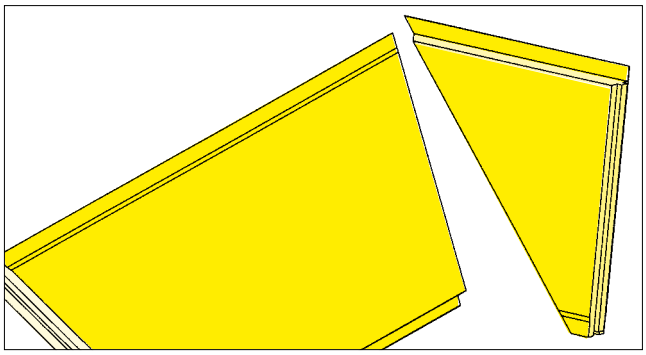

6. ... Turn residual piece, cut off top hard fibre strip and PUR/PIR tongfue, place the side with the hard fibre strips onto the wooden boarding ...

Linzmeier Bauelemente GmbH Industriestraße 21 · 88499 Riedlingen, Germany· **T** +49 (0) 7371 1806-0 · **F** +49 (0) 7371 1806-96
Schortentalstr. 24 · 07613 Heideland b. Eisenberg/Th. Germany ·
T +49 (0) 36691 722-0 · **F** +49 (0) 36691 722-20
Info@Linitherm.de · www.Linitherm.de

T 1a
LINITHERM PAL N+F

Low-waste installation in the valley

5. Install valley

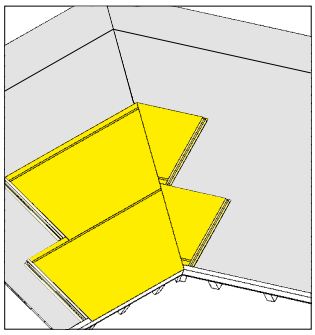

7. ... install secon row of panels ...

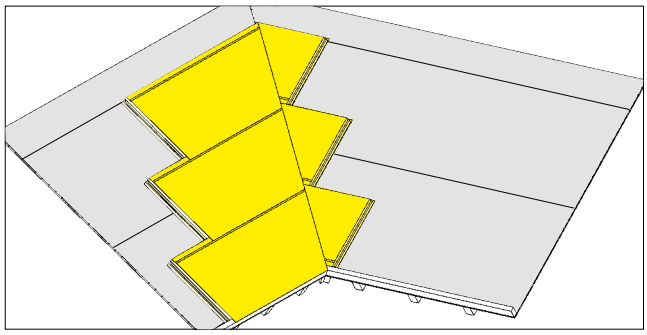

8. ...install third row of panels etc.

6. Row 1
Installation of further insulation elements in parallel to the eaves

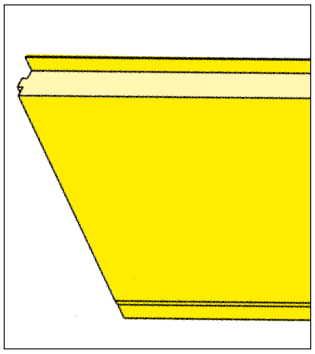

1. Cut off hard fibre strip on one side and PUR/PIR-tongue ...

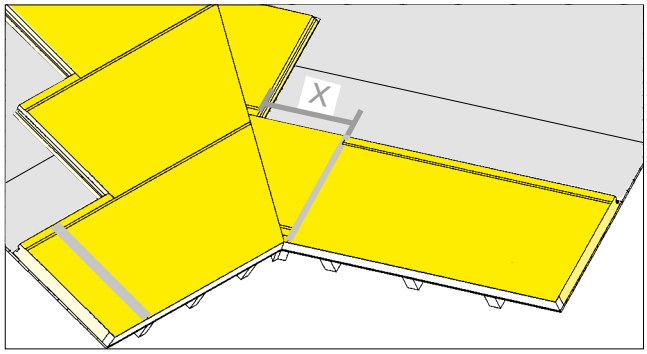

2. ... Firmly press the LINITHERM insulation element with the transverse side tongue into the groove of the wedge, mask the transversal sides with joint tapes... Measure X length ...

7. Installation of the other insulation elements

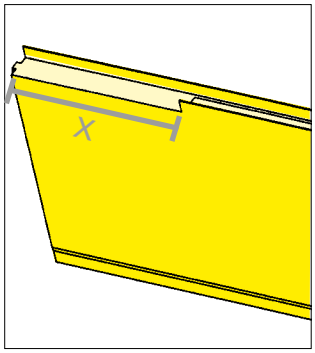

3. and tear on the following panel. Release the hard fibre pael and PUR/ PIR tongue at the panel or the second row ...

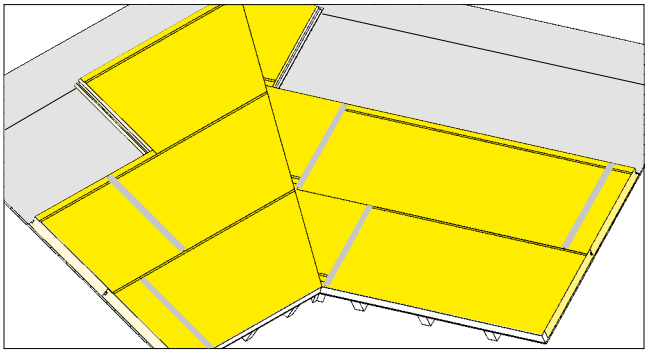

4. ... Install panel and foam butt joint...

5. install the remaining panels as usual.

8. Ready installed insulation

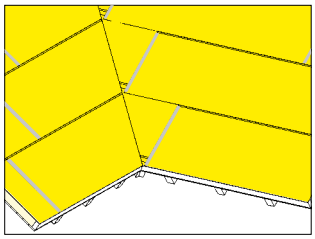

Ready-installed roof surface.

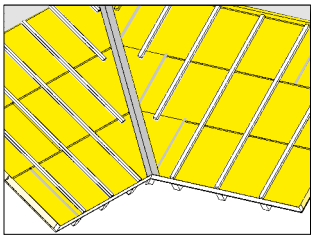

Attach the counter-slats, foam collar joint and stick on collar tape...

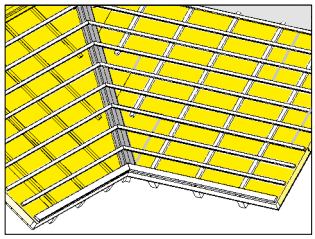

Insert to counter-slats in the valley area and fix to the roof lslats; full-surface support may possibly be necessary for a valley plate.

Linzmeier Bauelemente GmbH Industriestraße 21 · 88499 Riedlingen, Germany· T +49 (0) 7371 1806-0 · F +49 (0) 7371 1806-96
Schortentalstr. 24 · 07613 Heideland b. Eisenberg/Th. Germany ·
T +49 (0) 36691 722-0 · F +49 (0) 36691 722-20
Info@Linitherm.de · www.Linitherm.de

Installation instructions for element type LINITHERM PAL Polymer

The LINITHERM PAL Polymer elements are closely fitted together on the longitudinal and transversal sides.
The elements are installed row by row from bottom to top parallel to the eaves.
The factory-fitted polymer sheeting must overlap the neighbouring element on the longitudinal and transversal side, such that a perfect moisture drainage is ensured. The longitudinal overlap faces downwards. Pull the backing off the sealing tape and press the overlap on firmly. The surfaces must be clean, dry and free of grease in the adhesive area.

After 2 - 3 rows, the counter-slats are attached immediately according to the static analysis. If necessary, apply LINITHERM mail sealing tape underneath the counter-lathing. The roof slats or ancillary slats are immediately mounted as a platform on the counter-slats.

Due to the longitudinal and transversal overlap, the elements can be used on rafters and on beams:
- Installation on rafters: The direction of installation of the longitudinal axis of the elements takes place in rows parallel to the eaves from bottom to top.
- IInstallation on beams: The direction of installation of the longitudinal axis of the elements takes place in rows in the direction of the eaves/ridge.

LINITHERM PAL Polymer elements fulfil the requirements on a seamless and perforation-proof sarking membrane with a roof pitch less inclined than standard gradient by up to 8° (minimum roof pitch 14°). in accordance with the set of rules of the "Deutschen Dachdeckerhandwerks" (Jan. 2010) in conjunction with the LINITHERM nil sealing tape.
See also: "LINITHERM assembly instructions including the ZVDH guidelines".

Otherwise the instructions from our sheet "General information and examples regarding the installation of LINITHERM above-rafter insulation systems".must be observed.

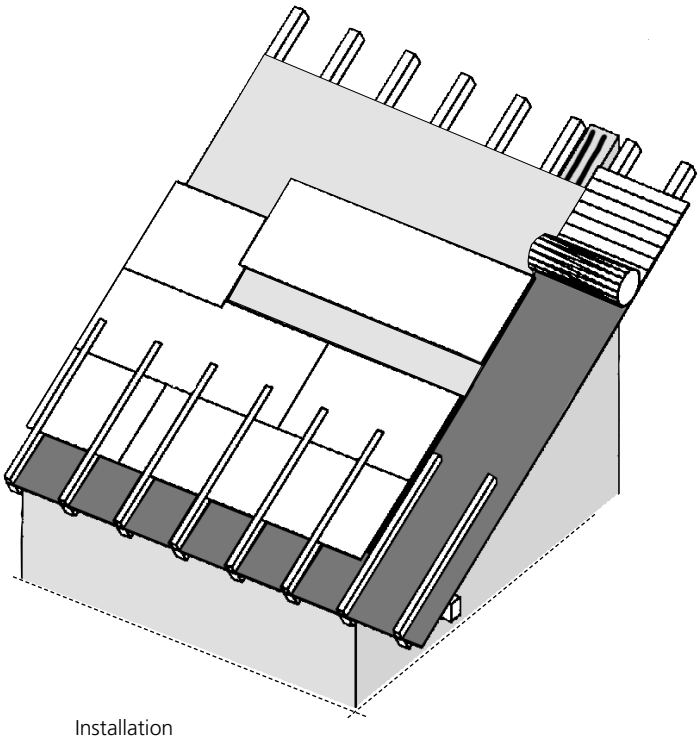

Installation
LINITHERM PAL Polymer
directly on the rafters with
LINITHERM L+D film

Linzmeier Bauelemente GmbH Industriestraße 21 · 88499 Riedlingen, Germany· **T** +49 (0) 7371 1806-0 · **F** +49 (0) 7371 1806-96
Schortentalstr. 24 · 07613 Heideland b. Eisenberg/Th. Germany ·
T +49 (0) 36691 722-0 · **F** +49 (0) 36691 722-20
Info@Linitherm.de · www.Linitherm.de

Installation instructions for element type LINITHERM PAL SIL T

LINITHERM PAL SIL T is an additional insulation with integrated building board, which can be combined with most LINITHERM above-rafter insulation systems (except PAL OSB and PGV Flex).

The elements are usually separated in the connection area for the creation of air tightness to the exterior walls.
The airtight connection is established for example by means of LINITHERM connecting apron.
This is connected airtight to the exterior walls with the integrated Compriband and then runs through the separating joint onto the element.
The apron is bonded airtight on the top side to the sarking membrane of the PAL SIL T insulation, such that the airtight planes are inter-connected. The coating sarking membrane e.g. is masked/stuck on e.g. with the T-adhesive tape at the butt panel joints (e.g. ridge/burr/valley cuts) and at the continuous components/connections etc.

The LINITHERM PAL PAL SIL T elements are closely fitted together on the longitudinal and transversal sides. The elements are installed row by row from bottom to top parallel to the eaves. The longitudinal overlap of the T-sheeting always faces downwards. Cross joints or transversal joints on top of one another within one rafter field must be avoided.
Pull the backing off the sealing tape and press the overlap on firmly. The surfaces of the elements must be clean, dry and free of grease in the adhesive area.

After the installation of approx. 2 - 3 rows, the further LINITHERM insulation (see installation instructions for the respective element) are installed, to which the counter-slats are attached in accordance with the static analysis.
The roof slats or ancillary slats are immediately mounted as a platform on the counter-slats.

As the rafters or the silicate surfaces of the insulation elements usually remain visible in the room, attention must be paid that the rafters are clean and dry prior to installation.
A paper joint tape is incorporated in the grove of the silicate panel before filling. Then smooth the elements with filler.

Caution: As the roof structure or a wooden structure is exposed to certain tensions due to wind/now loads/ deformations of the rafters, the formation of cracks cannot be completely ruled out. Smoothing should only take place when the moisture has dried out (panel moisture of silicate panel approx. 4%), i.e.t eh panels are dry and stay dry. Then grind the joints as usual.
In the connection area to the brickwork, a highlighted joint must always be provided e.g. valley cut with adhesive tape or plaster rail. It is recommendable to apply a deep primer as preparation for the decorative design. This also saves material when it comes to painting.

Note: If wind-resistant bracing should become necessary via spiked bands, please request our special instructions.

Otherwise, the information from our leaflet "General information and examples for the installation of LINITHERM insulation systems on the rafters must be observed.

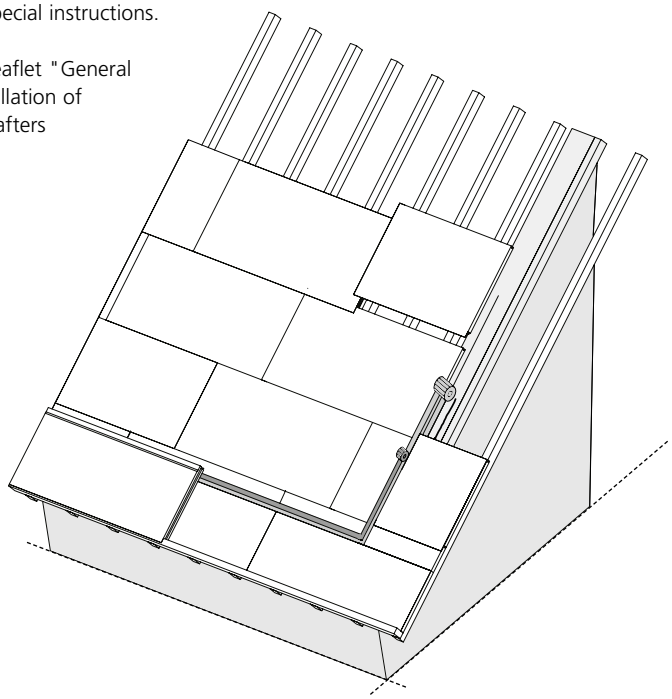

Fig. 1
Installation LINITHERM PAL SIL T directly on the rafters e.g. in conjunction with LINITHERM PAL N+F

Linzmeier Bauelemente GmbH Industriestraße 21 · 88499 Riedlingen, Germany· **T** +49 (0) 7371 1806-0 · **F** +49 (0) 7371 1806-96
Schortentalstr. 24 · 07613 Heideland b. Eisenberg/Th. Germany ·
T +49 (0) 36691 722-0 · **F** +49 (0) 36691 722-20
Info@Linitherm.de · www.Linitherm.de

Installation information for element types
LINITHERM PAL 2U, LINITHERM PAL 2U Plus, LINITHERM PGV T, LINITHERM PAL 2UM, LINITHERM PAL HT and LINITHERM PGV HT

The installation of LINITHERM PAL 2U, LINITHERM PAL 2U Plus, LINITHERM PGV T, LINITHERM PAL 2UM, LINITHERM PAL HT and LINITHERM PGV HT can take place both on the boarding and directly on the rafters. LINITHERM L+D film must be installed underneath the element. The continuous L+D film is joint-bonded and connected airtight to the rising building components and penetrations.

The elements are closely fitted together on the longitudinal and transversal sides. They are installed row by row from bottom to top parallel to the eaves. The longitudinal overlap always faces downwards.

Pull the backing off the sealing tape and press the overlap on firmly. The surfaces of the elements must be clean, dry and free of grease in the adhesive area.

For improved sound insulation we recommend with LINITHERM PAL 2UM, LINITHERM PAL HT or PGV HT the opposing screw fastening with LINIFIX double thread screws.

The insulation elements fulfil the requirements on a seamless and perforation-proof sarking membrane with a roof pitch less inclined than standard gradient by up to 8° (minimum roof pitch 20°).in accordance with the set of rules of the "Deutschen Dachdeckerhandwerks“ (Jan. 2010) in conjunction with the LINITHERM nil sealing tape.
See also: "LINITHERM assembly instructions including the ZVDH guidelines".
The element LINITHERM PAL 2U Plus even fulfils in conjunction with a nail sealing tape the requirements on a rainproof under-roof with a roof pitch less inclined than standard gradient by up to 12° (minimum roof pitch 12°)

Otherwise the instructions from our sheet "General information and examples regarding the installation of LINITHERM above-rafter insulation systems“.must be observed.

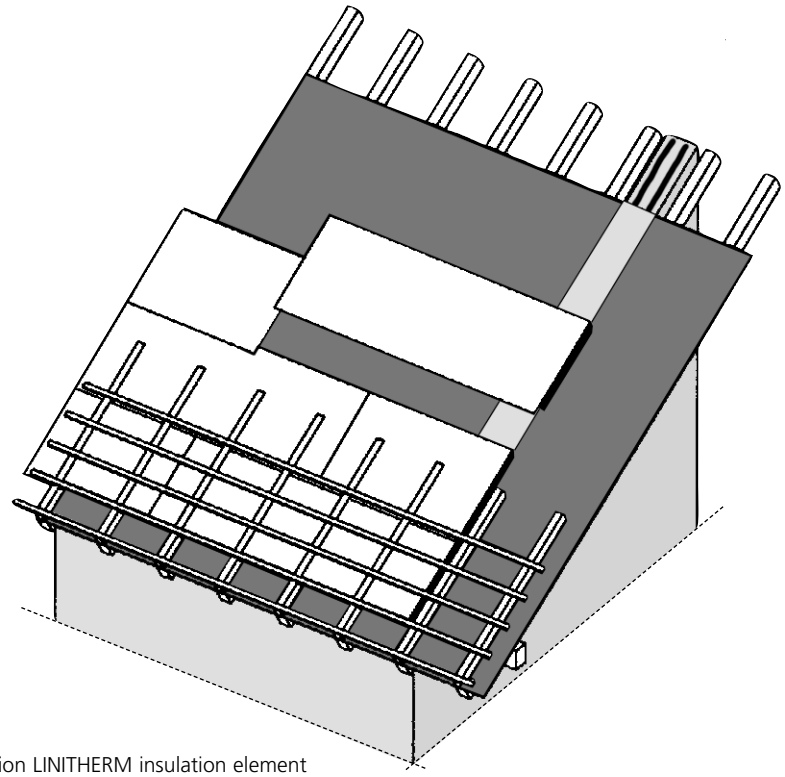

Fig. 1
Installation LINITHERM insulation element on boarding with L+D film

Linzmeier Bauelemente GmbH Industriestraße 21 · 88499 Riedlingen, Germany· **T** +49 (0) 7371 1806-0 · **F** +49 (0) 7371 1806-96
Schortentalstr. 24 · 07613 Heideland b. Eisenberg/Th. Germany ·
T +49 (0) 36691 722-0 · **F** +49 (0) 36691 722-20
Info@Linitherm.de · www.Linitherm.de